UNIT 5 Torque and Rotational Dynamics

5.1 Rotational Kinematics

5.2 Connecting Linear and Rotational Motion

5.3 Torque

5.4 Rotational Inertia

5.5 Rotational Equilibrium and Newton’s First Law in Rotational Form

5.6 Newton’s Second Law in Rotational Form

5.1 Rotational Kinematics

When a rigid object rotates about its axis, at any given time different parts of the object have different linear velocities and linear accelerations.

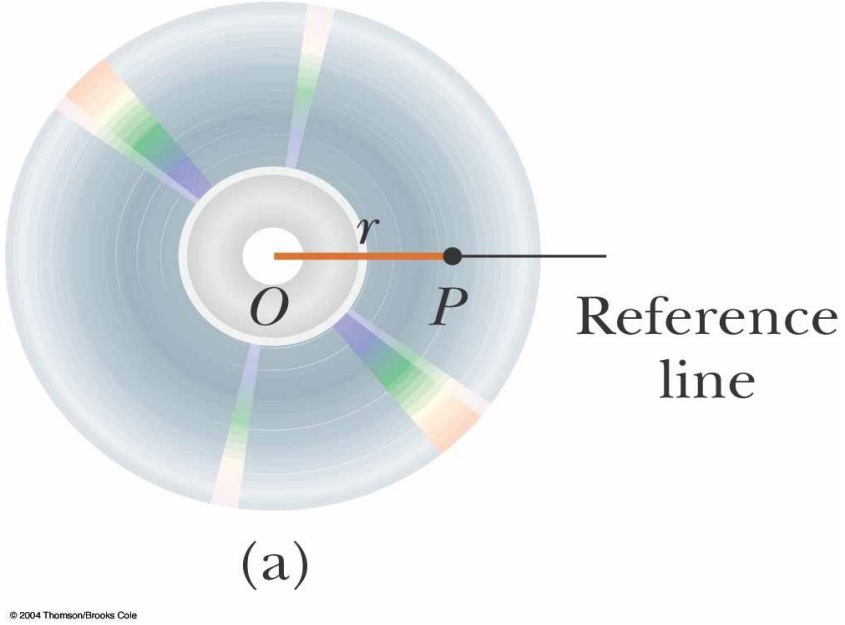

A particle at point P at a fixed distance r from origin is rotating about axis O.

Angular Position, Velocity, and Acceleration

When a rigid body rotates about a fixed axis,

- the angle it turns through is referred to as its **angular displacement**, $\Delta\theta$.

The unit of angular displacement is the radian (abbreviated as rad) where 2π radians = 360°.

For angular displacement $\Delta\theta$, the number of turns made, $n = \dfrac{\Delta\theta}{2\pi}$. For example, if $\Delta\theta = 13.4$ rad, $n = 2.13$ turns (to 3 significant figures) $\left(= \dfrac{13.4}{2\pi}\right)$.

- Its **angular speed, ω, is the change of the angle it turns through per second.**

The unit of angular speed is the radian per second (i.e., rad s^{-1}).

Angular speed and angular acceleration

Notes:

1 **Angular velocity** is angular speed in a certain direction of rotation, either clockwise or anticlockwise.

2 Angular speed and angular velocity are sometimes expressed in *revolutions per minute* or *rpm*. To convert to rad s^{-1}, multiply by $\frac{2\pi}{60}$ as there are 2π radians per revolution and 60 seconds per minute.

For a rotating object that turns through angular displacement $\Delta\theta$ in a time interval Δt

$$\textbf{its average angular speed during this time} = \frac{\Delta\theta}{\Delta t}$$

Angular speed and angular acceleration

1 If an object is rotating at constant angular speed ω, its angular displacement $\Delta\theta$ in one rotation is 2π radians.
Therefore

$$\omega = \frac{2\pi}{T}, \text{ where } T \text{ is its period of rotation.}$$

2 If the angular speed or direction of rotation of a rotating body changes, its **angular acceleration** α is the change of its angular velocity per second.
The unit of angular acceleration is the radian per second per second (i.e., rad s^{-2}).

For constant angular acceleration, if the change of angular speed is $\Delta\omega$ in a time interval Δt

$$\textbf{its angular acceleration } \alpha = \frac{\Delta\omega}{\Delta t}$$

Example 10.1 Rotating Wheel AM

A wheel rotates with a constant angular acceleration of 3.50 rad/s^2.

(A) If the angular speed of the wheel is 2.00 rad/s at $t_i = 0$, through what angular displacement does the wheel rotate in 2.00 s?

(B) Through how many revolutions has the wheel turned during this time interval?

(C) What is the angular speed of the wheel at $t = 2.00$ s?

Angular speed and angular acceleration

When a flywheel rotates at constant angular speed, its angular acceleration is zero because its angular speed does not change. If ω is its angular speed, its period of rotation $T = \frac{2\pi}{\omega}$. If the flywheel has a radius R, a point on the flywheel rim moves on a circular path at a speed $v = \omega R$.

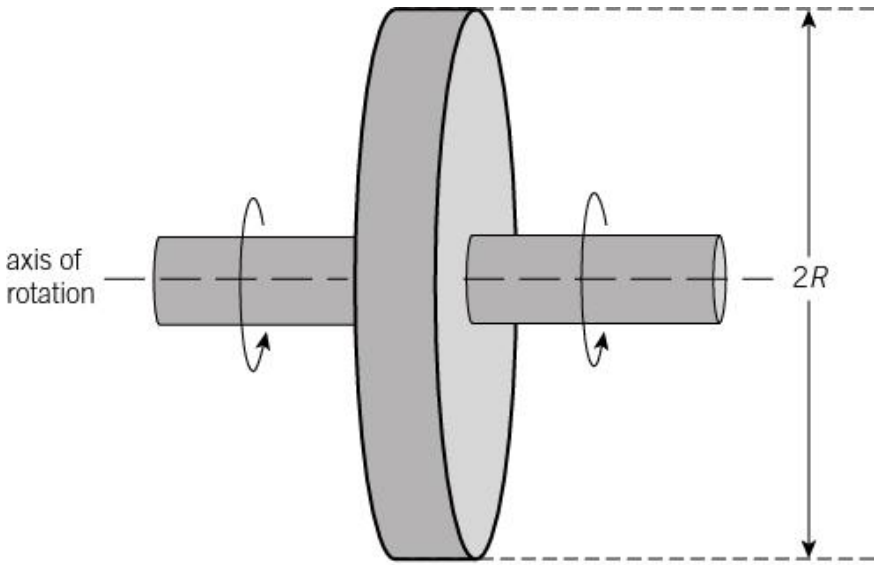

▲ **Figure 1** *A flywheel in motion*

Angular speed and angular acceleration

When a flywheel speeds up, every point of the flywheel moves at increasing speed. If the flywheel speeds up from initial angular speed ω_1 to angular speed ω_2 in time t, then:

- its angular acceleration $\alpha = \dfrac{(\omega_2 - \omega_1)}{t}$
- the speed of any point on its rim increases from speed $u = \omega_1 R$ to speed $v = \omega_2 R$ in time t, where R is the radius of the flywheel
- the speeding-up process accelerates such a point along a circular path of radius R. Therefore the acceleration, a, of the point along its path may be calculated from

$$a = \frac{(v - u)}{t} = \frac{\omega_2 R - \omega_1 R}{t} = \frac{(\omega_2 - \omega_1)R}{t} = \alpha R$$

Angular speed and angular acceleration

In general, for any rotating body, for any point (i.e., small *element*) in the body at radial distance r from the axis of rotation,

- its speed $v = \omega r$
- its acceleration $a = \alpha r$
- every part of a rotating object experiences the same angular acceleration. However, the acceleration, a, at a point in the body is tangential to its circular path (i.e., its linear acceleration) and is proportional to r (because $a = \alpha r$).

Note:

Every point of a rotating object experiences a centripetal acceleration equal to $\omega^2 r$ which acts directly towards the centre of rotation of that point.

Angular speed and angular acceleration

Worked example

A flywheel is speeded up from 5.0 to 11.0 revolutions per minute in 100 s. The radius of the flywheel is 0.080 m. Calculate the angular acceleration of the flywheel and the acceleration of a point on the rim along its circular path.

Solution

Initial angular speed $\omega_1 = 5.0 \times 2\pi / 60 = 0.52\,\text{rad}\,\text{s}^{-1}$

Angular speed after 100 s, $\omega_2 = 11.0 \times 2\pi / 60 = 1.15\,\text{rad}\,\text{s}^{-1}$

Angular acceleration, $\alpha = \dfrac{(\omega_2 - \omega_1)}{t} = \dfrac{1.15 - 0.52}{100} = 6.3 \times 10^{-3}\,\text{rad}\,\text{s}^{-2}$

Acceleration tangential to the rim, $a = \alpha R = 6.3 \times 10^{-3} \times 0.080 = 5.0 \times 10^{-4}\,\text{m}\,\text{s}^{-2}$

Example 10.2 CD Player AM

On a compact disc (Fig. 10.6), audio information is stored digitally in a series of pits and flat areas on the surface of the disc. The alternations between pits and flat areas on the surface represent binary ones and zeros to be read by the CD player and converted back to sound waves. The pits and flat areas are detected by a system consisting of a laser and lenses. The length of a string of ones and zeros representing one piece of information is the same everywhere on the disc, whether the information is near the center of the disc or near its outer edge. So that this length of ones and zeros always passes by the laser–lens system in the same time interval, the tangential speed of the disc surface at the location of the lens must be constant. According to Equation 10.10, the angular speed must therefore vary as the laser–lens system moves radially along the disc. In a typical CD player, the constant speed of the surface at the point of the laser–lens system is 1.3 m/s.

(A) Find the angular speed of the disc in revolutions per minute when information is being read from the innermost first track ($r = 23$ mm) and the outermost final track ($r = 58$ mm).

(B) The maximum playing time of a standard music disc is 74 min and 33 s. How many revolutions does the disc make during that time?

(C) What is the angular acceleration of the compact disc over the 4 473-s time interval?

Equations for constant angular acceleration

These may be derived in much the same way as the equations for straight-line motion with constant acceleration.

1 From the definition of angular acceleration α above, we rearrange the equation to obtain

$$\omega = \omega_0 + \alpha t$$

where ω_0 = initial angular speed and ω = angular speed at time t.

2 The average value of the angular speed is obtained by averaging the initial and final values, giving an average value of $\frac{1}{2}(\omega + \omega_0)$.

The angle which the object turns through, the angular displacement θ, is equal to the average angular speed × the time taken, which gives

$$\theta = \frac{1}{2}(\omega + \omega_0)t$$

Equations for constant angular acceleration

3 The two equations above can be combined to eliminate ω to give

$$\theta = \omega_0 t + \frac{1}{2}\alpha t^2$$

4 Alternatively, the first two equations may be combined to eliminate t, giving

$$\omega^2 = \omega_0{}^2 + 2\alpha\theta$$

Note:

The four equations above are directly comparable with the four linear dynamics equations. The task of using the angular equations is made much easier by 'translating' between linear and angular terms, as shown in Table 1

5.2 Connecting Linear and Rotational Motion

▼ Table 1

Linear equations		Angular equations
Displacement		angular displacement
s	$\longleftrightarrow$	θ
Speed or velocity		angular speed
u	$\longleftrightarrow$	ω_0
v	$\longleftrightarrow$	ω
Acceleration		angular acceleration
a	$\longleftrightarrow$	α
For example		
$v = u + at$	$\longleftrightarrow$	$\omega = \omega_0 + \alpha t$
$s = \frac{1}{2}(u+v)t$	$\longleftrightarrow$	$\theta = \frac{1}{2}(\omega_0 + \omega)t$
$s = ut + \frac{1}{2}at^2$	$\longleftrightarrow$	$\theta = \omega_0 t + \frac{1}{2}\alpha t^2$
$v^2 = u^2 + 2as$	$\longleftrightarrow$	$\omega^2 = \omega_0^2 + 2\alpha\theta$

$$s = r\theta$$

$$v = r\mu$$

$$a = r\alpha$$

Angular motion graphs

Angular motion can be represented graphically in a similar way to linear motion, as shown in Table 2 below.

▼ **Table 2**

Angular motion graph	Equivalent linear motion graph
1 Angular displacement θ against time t	**1 Displacement s against time t**
Gradient = angular velocity ω	gradient = velocity v
2 Angular velocity ω against time t	**2 Velocity v against time t**
Gradient = angular acceleration α	gradient = (linear) acceleration a
Area under the graph = angular displacement θ	area under the graph = displacement s

Angular motion graphs

- The angular displacement graph in Figure 2 shows how angular displacement of a rotating object changes with time.

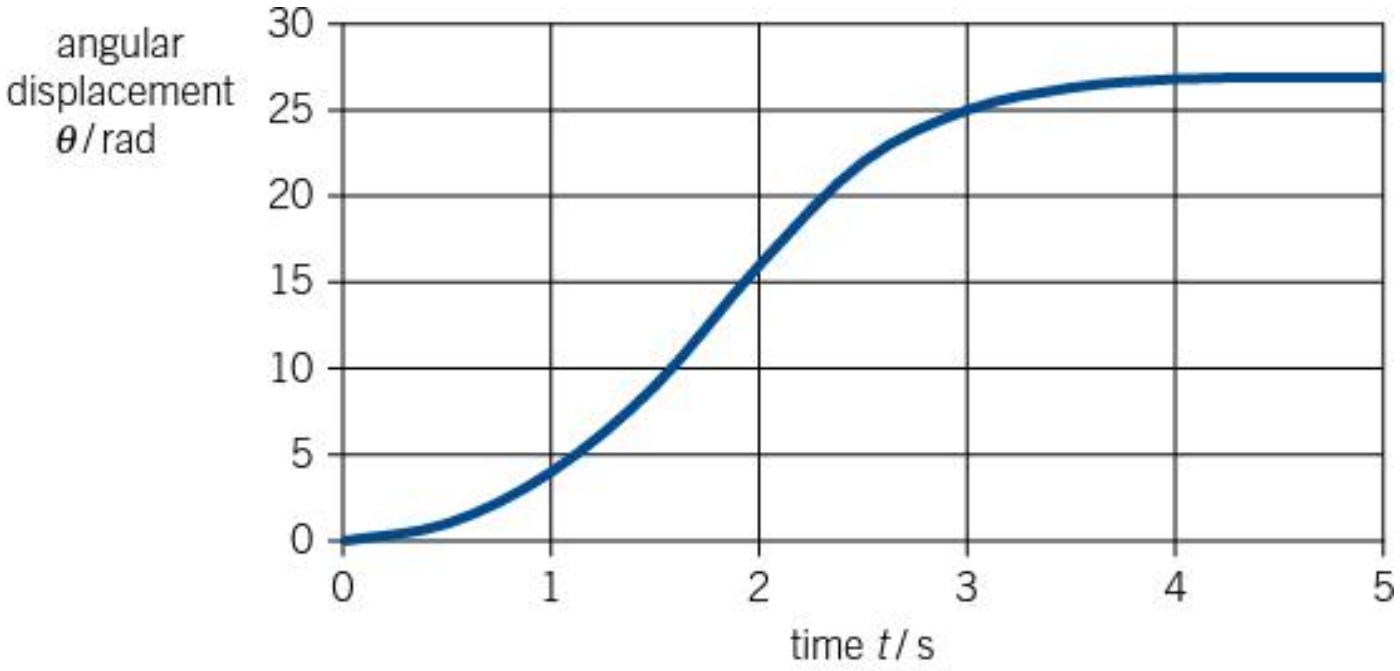

▲ **Figure 2** *Graph of angular displacement against time*

Angular motion graphs

In this example, the gradient of the line increases from zero, then becomes constant, then decreases to zero. If the graph showed how the displacement of an object varied with time, we would be able to tell from its gradient that the velocity increased from zero, reached a constant value, then decreased to zero again. The gradient of the line in Figure 2 tells us that the object's angular velocity increases from zero to a maximum value then decreases to zero. The angular velocity at any point on the line is given by the gradient of the line at that point.

Angular motion graphs

The **angular velocity graph** in Figure 3 shows how the angular velocity of a different rotating object changed with time. In this example, the angular velocity increases, then peaks, and then decreases to zero.

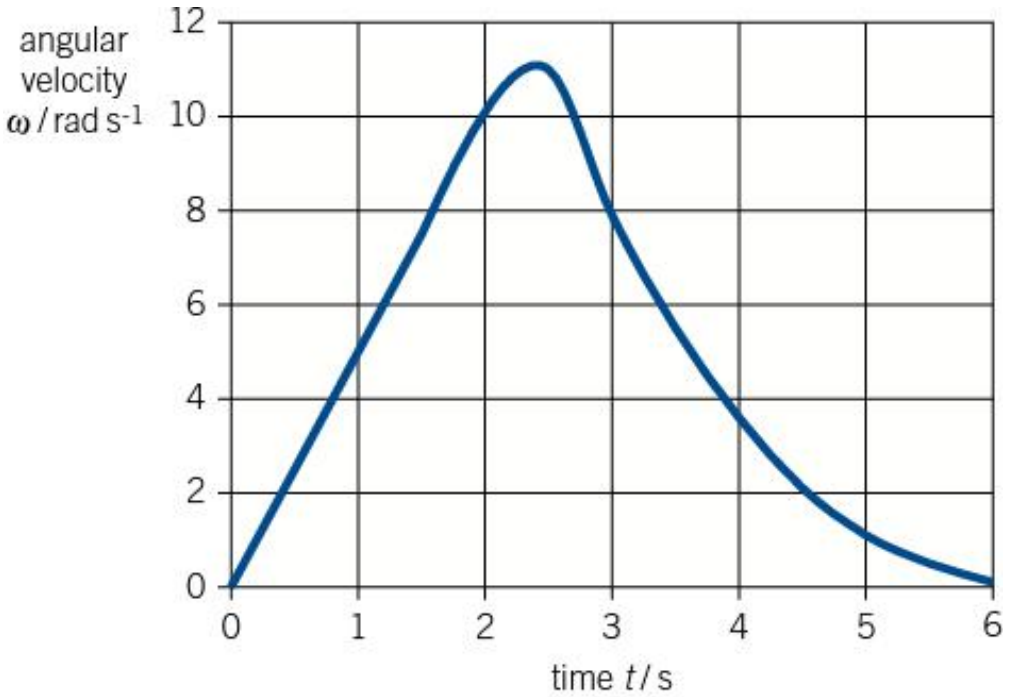

▲ **Figure 3** *Graph of angular velocity against time*

Angular motion graphs

- The gradient of the line gives the angular acceleration of the object. The gradient is constant at first, then it decreases, and then it becomes negative. So the gradient tells us that the object has a constant angular acceleration at first. Then its angular acceleration decreases to zero, where its angular velocity is a maximum. Then its angular acceleration becomes negative so its angular velocity decreases until it stops rotating.
- The area under the line gives the angular displacement of the object. The area under the last part of the line where the angular velocity decreases is greater than the area under the first part of the line where the angular velocity increases. This tells us that the angular displacement in the last part is greater than during the first part. In other words, the object makes more turns when slowing down than it does when speeding up.

5.3 Torque

The torque of a turning force is the moment of the force about the axis of rotation.

Torque = force × perpendicular distance from the axis to the line of action of the force.

The unit of torque is the newton metre (N m).

The above definition gives the equation

$$\textit{torque}, \tau = Fr$$

where r is the perpendicular distance from the axis and F is the magnitude of the force.

Torque

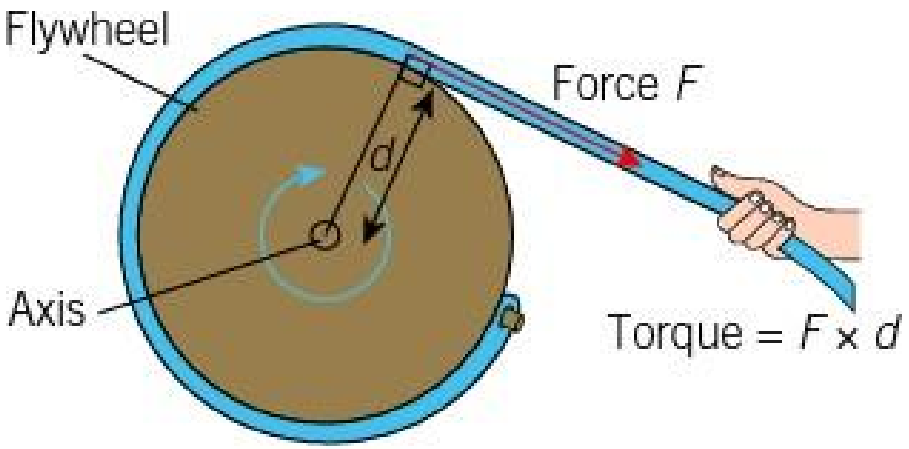

▲ **Figure 1** *Applying a torque*

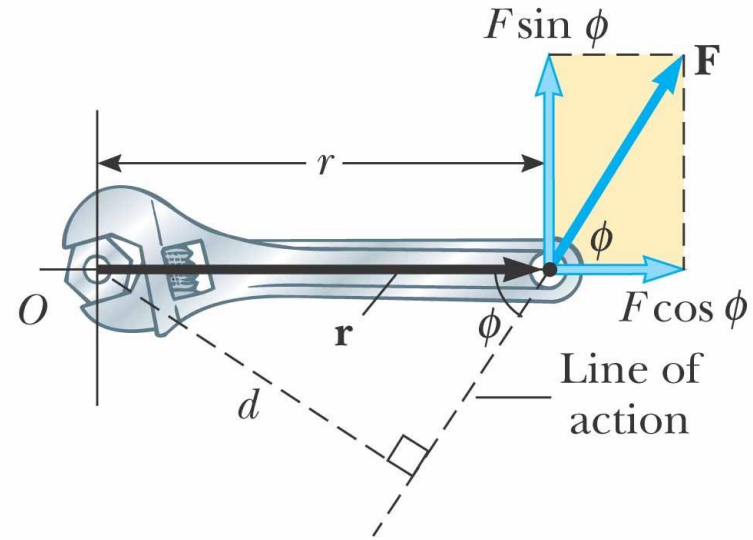

© 2004 Thomson/Brooks Cole

$$\tau = r\,F\sin\phi = Fd$$

distance between pivot point and point of application of F

perpendicular distance from pivot point to the line of action of F

Torque should not be confused with force.

Net Torque

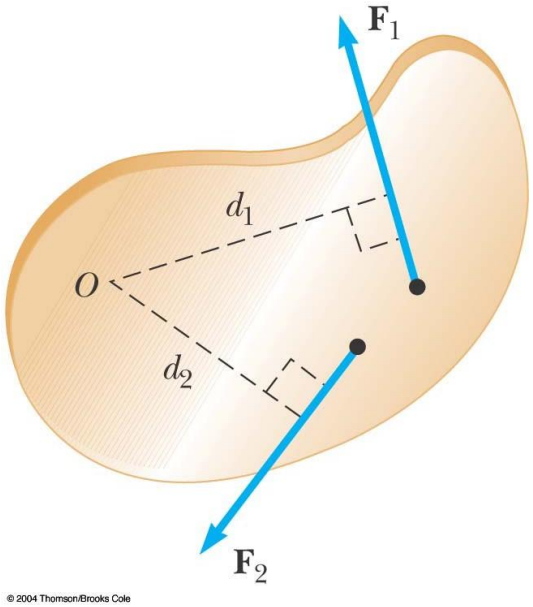

F1 tends to rotate counterclockwise (+t)

F2 tends to rotate clockwise (-t)

The net torque about axis 0 is

St = t1 + t2 = F1d1 – F2d2

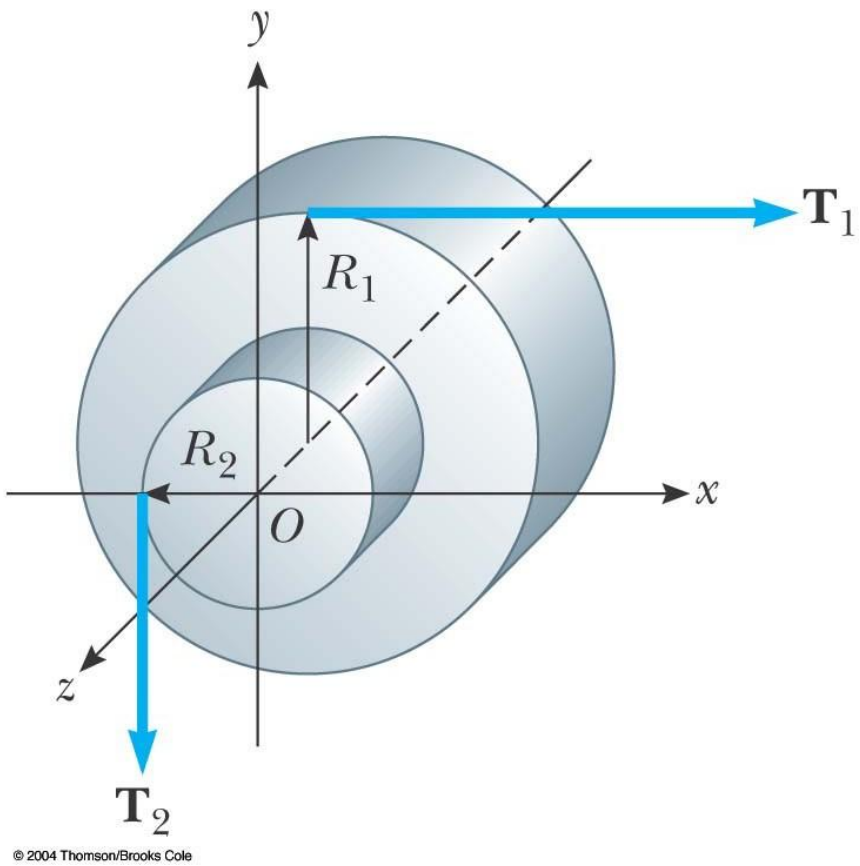

A one-piece cylinder is shaped as shown with a core section protruding from the larger drum. The cylinder is free to rotate about the central axis shown in the drawing. A rope wrapped around the drum, which has radius R1, exerts a force T1 to the right on the cylinder. A rope wrapped around the core, which has radius R2, exerts a force T2 downward on the cylinder.

a) What is the net torque acting on the cylinder about the rotation axis (z-axis) ?

b) Suppose T1 = 5.0 N, R1 = 1.0 m, T2 = 15.0 N, and R2 = 0.50 m. What is the net torque about the rotation axis, and which way does the cylinder rotate starting from rest ?

5.4 Rotational Inertia

The **inertia** of an object is its resistance to change of its motion. If a large torque is required to start a flywheel turning, the flywheel must have considerable inertia. In other words, its resistance to change of its motion is large.

Every object has the property of inertia because every object has mass. However, the inertia of a rotating body depends on the distribution of mass about the axis of rotation as well as the amount of mass. For example, the moment of inertia of a rod about an axis perpendicular to the rod is very different if the axis is through one end of the rod than if it is through the centre of the rod.

The **moment of inertia** describes the rotational inertia of an object about an axis and measures the object's resistance to rotational motion. The formula for the moment of inertia depends on the shape of the object, the mass distribution, and the location of the axis of rotation.

The basic formula for the moment of inertia is:

$$I = \sum m_i r_i^2$$

where:

- I is the moment of inertia,
- m_i is the mass of the ith small part of the object,
- r_i is the distance from the center of mass of that part to the axis of rotation.

Parallel Axis Theorem

The moment of inertia of any object about an axis through its center of mass is always the minimum moment of inertia for any axis in that direction in space.

The moment of inertia about any axis that is parallel to the axis through the center of mass is given by:

$$I_{\text{parallel axis}} = I_{\text{cm}} + mr^2$$

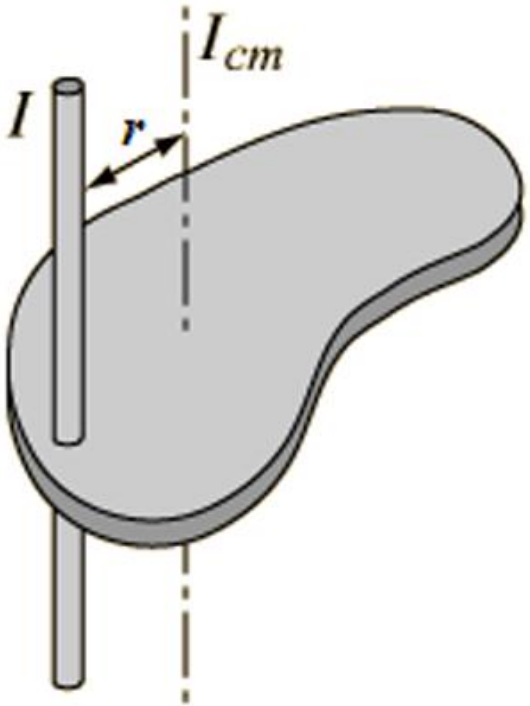

5.5 Rotational Equilibrium and Newton's First Law in Rotational Form

Rotational equilibrium occurs when the net torque acting on an object is zero. In this state, the object is either at rest or rotating with a constant angular velocity. For an object to be in rotational equilibrium, the sum of all torques (τ) acting on it must satisfy the following condition:

$$\Sigma\tau = 0$$

Newton's First Law in rotational form states that an object will maintain its state of rotational motion unless acted upon by a net external torque. This can be understood as:

If the net external torque on an object is zero, the object will remain in its current state of rotational motion. If the object is at rest, it will stay at rest; if it is rotating, it will continue to rotate at a constant angular velocity.

5.6 Newton's Second Law in Rotational Form

Consider a flat rigid body which can be rotated about an axis perpendicular to its plane, as shown in Figure 2. Suppose it is initially at rest and a torque is applied to make it rotate. Assuming there is no friction on its bearing, the applied torque will increase its angular speed.

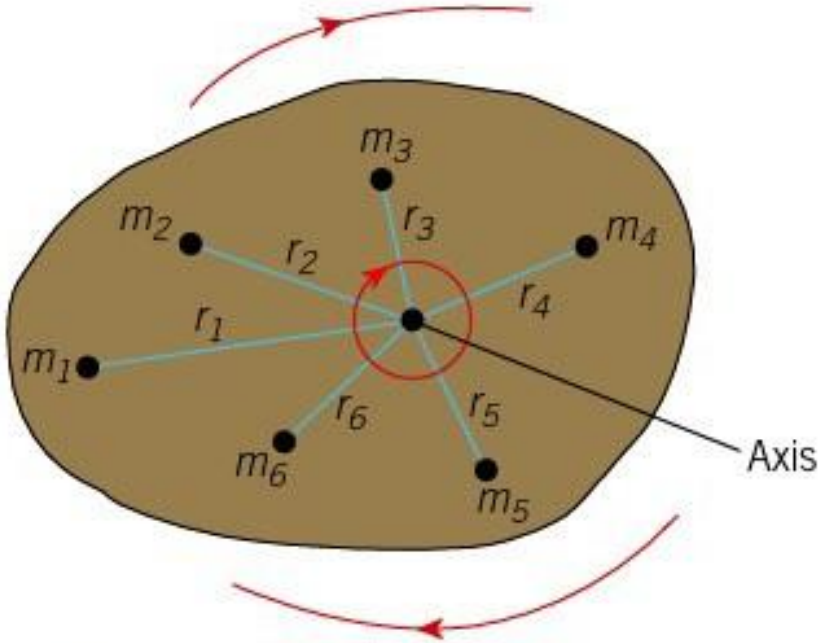

▲ **Figure 2** *A rigid body considered as a network of point masses*

When the torque is removed, the angular speed stops increasing, so it turns at constant frequency once the torque is removed.

The body in Figure 2 may be thought of as a network of point masses, m_1, m_2, m_3, etc., at distances r_1, r_2, r_3, etc. from the axis. Each point turns on a circular path about the axis.

At angular speed ω, the speed of each point is given by $v = \omega r$ so

- the speed of m_1 is ωr_1
- the speed of m_2 is ωr_2, etc.

When the body speeds up, every point in it accelerates. If the angular acceleration of the body is α, then the acceleration of each point mass is given by $a = \alpha r$. So

- the acceleration of m_1 is αr_1
- the acceleration of m_2 is αr_2, etc.

Using $F = ma$, the force needed to accelerate each point mass is therefore given by

- $F_1 = m_1 \alpha r_1$ for m_1
- $F_2 = m_2 \alpha r_2$ for m_2, etc.

$$I = mr^2$$

Relationship between Torque and Angular Acceleration

The moment needed for each point mass to be given angular acceleration α is given by force $F \times$ distance r because moment = force $\times$ perpendicular distance from the point mass to the axis. Therefore

- the moment for $m_1 = (m_1 \alpha r_1) r_1$
- the moment for $m_2 = (m_2 \alpha r_2) r_2$, etc.

The total moment (torque T) needed to give the body angular acceleration α = the sum of the individual moments needed for all N point masses. So

$$\text{torque } T = (m_1 r_1^2)\alpha + (m_2 r_2^2)\alpha + (m_3 r_3^2)\alpha + \ldots\ldots\ldots + (m_N r_N^2)\alpha$$

$$= [(m_1 r_1^2) + (m_2 r_2^2) + (m_3 r_3^2) + \ldots\ldots\ldots + (m_N r_N^2)]\alpha$$

$$\boxed{= I\alpha}$$

Relationship between Torque and Angular Acceleration

where $I = (m_1 r_1^2) + (m_2 r_2^2) + (m_3 r_3^2) + \ldots\ldots\ldots\ldots + (m_N r_N^2)$ is the **moment of inertia** of the body about the axis of rotation.

The summation $(m_1 r_1^2) + (m_2 r_2^2) + (m_3 r_3^2) + \ldots + (m_N r_N^2)$ is written in short form as $\sum mr^2$ (pronounced 'sigma m r squared).

The moment of inertia I of a body about a given axis is defined as $\sum m_i r_i^2$ for all the points in the body, where m_i is the mass of each point and r_i is its perpendicular distance from the axis.

The unit of inertia, I, is $\mathrm{kg\,m^2}$.

Example 2

A flywheel of moment of inertia $0.45\,\text{kg}\,\text{m}^2$ is accelerated uniformly from rest to an angular speed of $6.7\,\text{rad}\,\text{s}^{-1}$ in $4.8\,\text{s}$. Calculate the resultant torque acting on the flywheel during this time.

Solution

Angular acceleration

$$\alpha = \frac{(\omega_2 - \omega_1)}{t} = \frac{6.7 - 0}{4.8} = 1.4\,\text{rad}\,\text{s}^{-2}$$

Resultant torque

$$T = I\alpha = 0.45 \times 1.4 = 0.63\,\text{N}\,\text{m}$$

Moment of inertia and angular acceleration

When a resultant torque is applied to a body, the angular acceleration, α, of the body is given by $\alpha = \frac{T}{I}$. Therefore the angular acceleration depends not only on the torque T, but also on the moment of inertia I of the body about the given axis. This moment of inertia is determined by the distribution of mass about the axis.

Two bodies of equal mass whose mass is distributed in different ways will have different values of I. For example, compare a hoop and a disc of the same mass, as in Figure 3.

Moment of inertia and angular acceleration

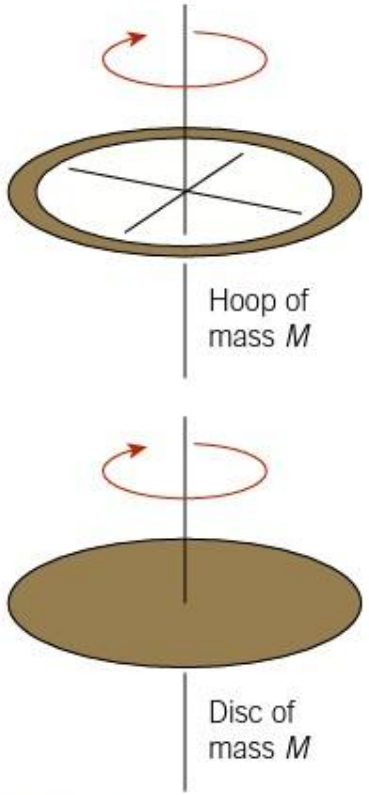

▲ **Figure 3** *Distribution of mass*

Moment of inertia and angular acceleration

About the axis shown,

- The moment of inertia of the hoop is simply MR^2 where M is its mass and R is its radius. This is because all the mass of the hoop is at the same distance: $(= R)$ from the axis. The moment of inertia I about the axis shown, $\sum mr^2$, is therefore just MR^2 for the hoop.
- The moment of inertia of the disc about the same axis is less than MR^2 because the mass of the disc is distributed between the centre and the rim. Calculations show that the value of I for the disc about the axis shown is $\frac{1}{2}MR^2$.

In general,

the further the mass is distributed from the axis, the greater the moment of inertia about that axis.

Table 10.2 **Moments of Inertia of Homogeneous Rigid Objects with Different Geometries**

Hoop or thin cylindrical shell

$I_{CM} = MR^2$

Hollow cylinder

$I_{CM} = \frac{1}{2}M(R_1^2 + R_2^2)$

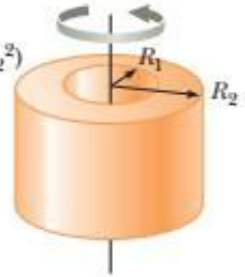

Solid cylinder or disk

$I_{CM} = \frac{1}{2}MR^2$

Rectangular plate

$I_{CM} = \frac{1}{12}M(a^2 + b^2)$

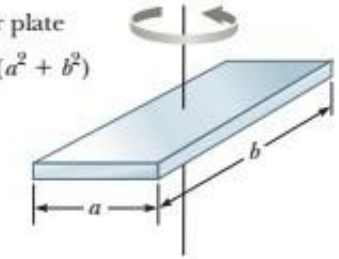

Long, thin rod with rotation axis through center

$I_{CM} = \frac{1}{12}ML^2$

Long, thin rod with rotation axis through end

$I = \frac{1}{3}ML^2$

Solid sphere

$I_{CM} = \frac{2}{5}MR^2$

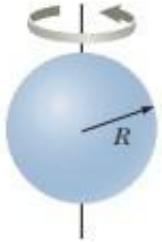

Thin spherical shell

$I_{CM} = \frac{2}{3}MR^2$

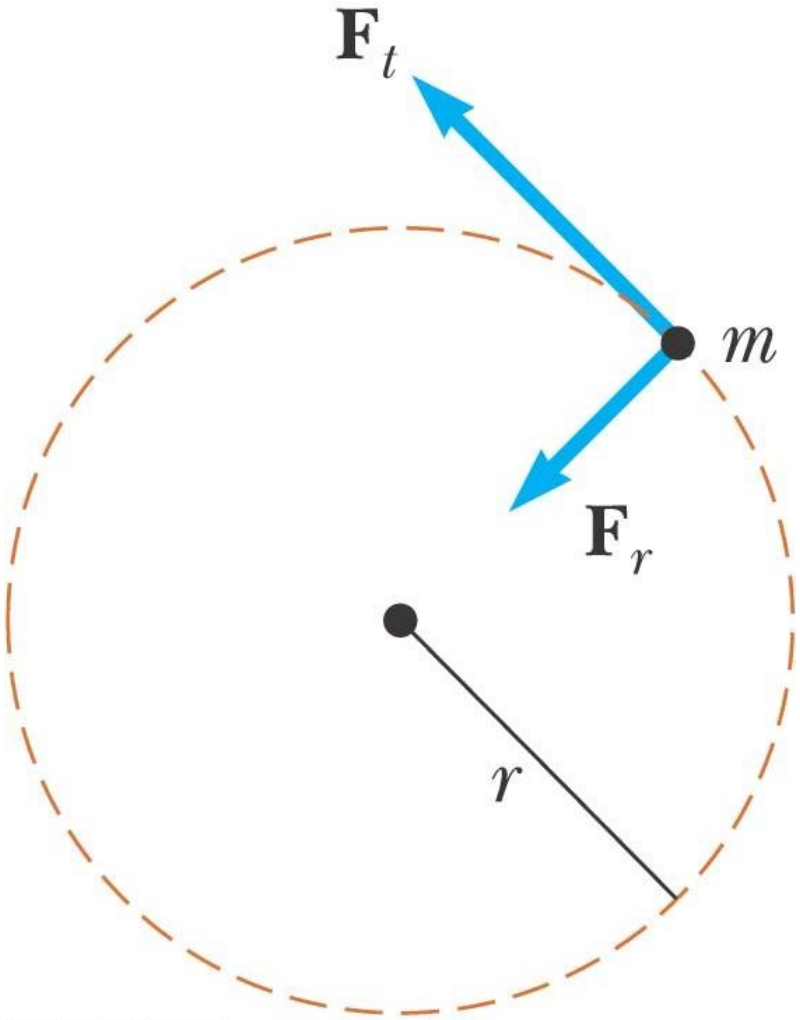

© 2004 Thomson/Brooks Cole

$$F_t = ma_t$$

$$t = F_t r = (ma_t)r$$

$$t = (mra)r = (mr^2)a$$

Since $I = mr^2$,

$$\boxed{St = Ia}$$

(rotational analog to Newton's Second Law)

Worked example

A solid circular disc of mass 4.0 kg and radius 0.15 m is rotating at an angular speed of 22 rad s^{-1} about an axis as shown in Figure 4 when a braking torque is applied to it which brings it to rest in 5.8 s.

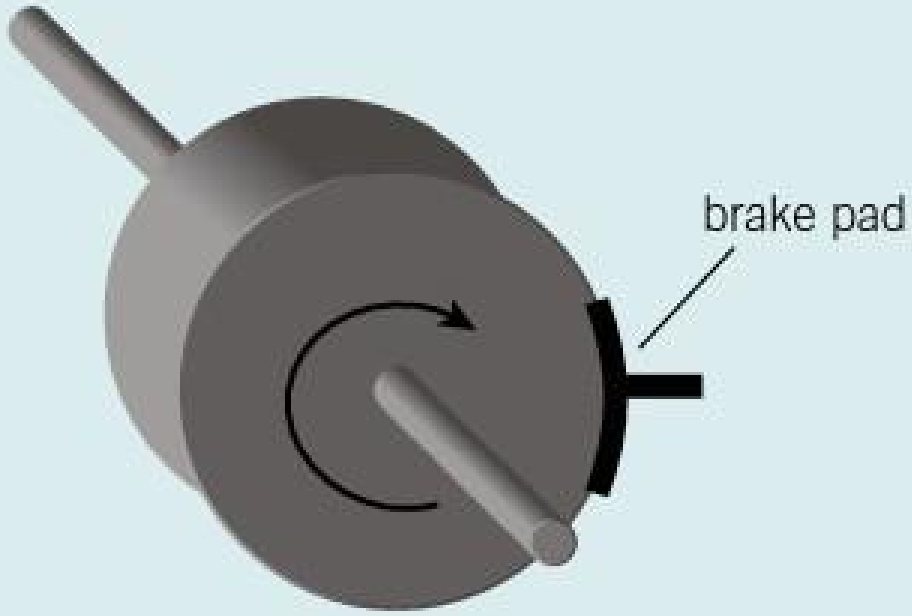

▲ Figure 4

Calculate:

a its angular deceleration when the braking torque is applied

b the moment of inertia of the disc about the axis shown

c the resultant torque that causes it to decelerate.

Moment of inertia of disc about the axis shown $= \frac{1}{2}MR^2$.

Solution

a Angular acceleration $\alpha = \frac{(\omega_2 - \omega_1)}{t} = \frac{22 - 0}{5.8} = 3.8\,\text{rad}\,\text{s}^{-2}$

b $I = \frac{1}{2}MR^2 = 0.5 \times 4.0 \times 0.15^2 = 0.045\,\text{kg}\,\text{m}^2$

c Resultant torque $T = I\,\alpha = 0.045 \times 3.8 = 0.17\,\text{N}\,\text{m}$

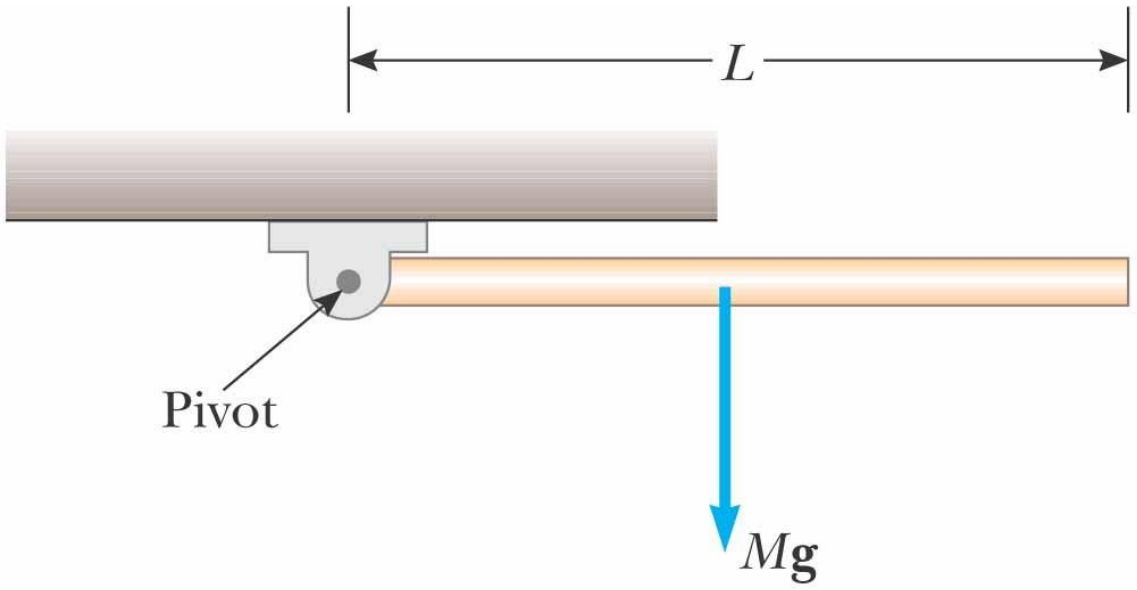

© 2004 Thomson/Brooks Cole

A uniform rod of length *L* and mass *M* is attached at one end to a frictionless pivot and is free to rotate about the pivot in the vertical plane. The rod is released from rest in the horizontal position. What is the initial angular acceleration of the rod and the initial linear acceleration of its right end ?

A wheel of radius R, mass M, and moment of inertia I is mounted on a frictionless horizontal axis. A light cord wrapped around the wheel supports an object of mass m.

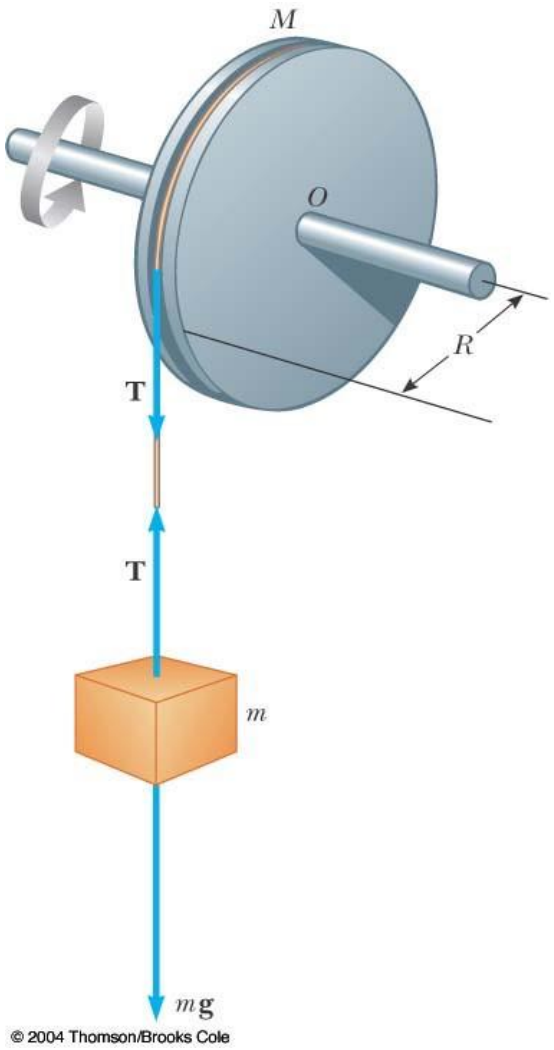

a) Calculate the angular acceleration of the wheel.

b) Calculate the linear acceleration of the object.

c) Calculate the tension in the cord.

Example 10.10 An Unusual Baton

Four tiny spheres are fastened to the ends of two rods of negligible mass lying in the xy plane to form an unusual baton (Fig. 10.19). We shall assume the radii of the spheres are small compared with the dimensions of the rods.

(A) If the system rotates about the y axis (Fig. 10.19a) with an angular speed ω, find the moment of inertia and the rotational kinetic energy of the system about this axis.

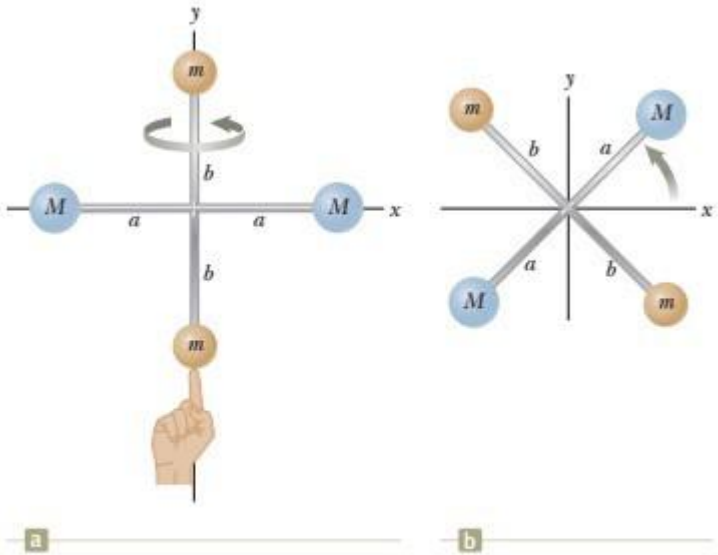

Figure 10.19 (Example 10.10) Four spheres form an unusual baton. (a) The baton is rotated about the y axis. (b) The baton is rotated about the z axis.

(B) Suppose the system rotates in the xy plane about an axis (the z axis) through the center of the baton (Fig. 10.19b). Calculate the moment of inertia and rotational kinetic energy about this axis.

Example Question of AP Classroom

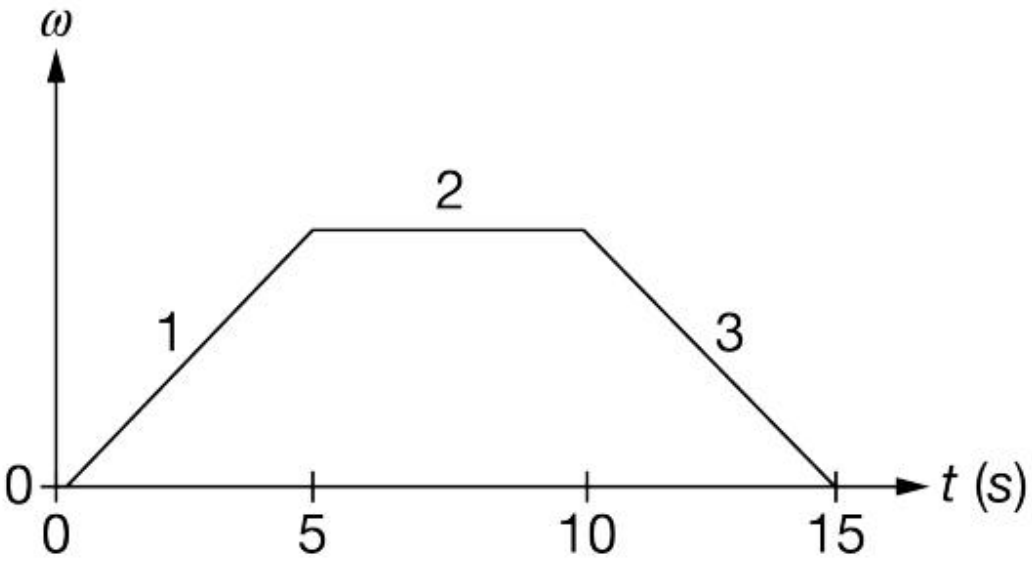

A graph of the angular velocity ω as a function of time t is shown for an object that rotates about an axis. Three time intervals, 1–3, are shown. Which of the following correctly compares the angular displacement $\Delta\theta$ of the object during each time interval?

(A) $\Delta\theta_1 = \Delta\theta_3 > \Delta\theta_2$

(B) $\Delta\theta_2 > \Delta\theta_1 = \Delta\theta_3$

(C) $\Delta\theta_3 > \Delta\theta_2 > \Delta\theta_1$

(D) $\Delta\theta_1 > \Delta\theta_2 > \Delta\theta_3$

Example Question of AP Classroom

A uniform ladder of mass M and length L rests against a smooth wall at an angle θ_0, as shown in the figure. What is the torque due to the weight of the ladder about its base?

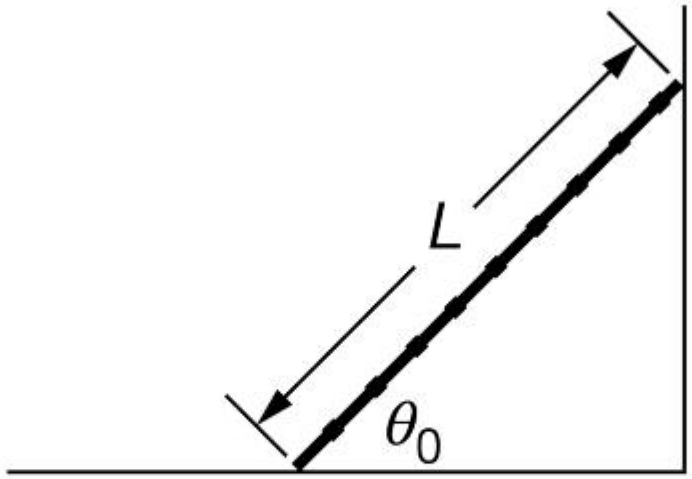

(A) $MgL \sin(\theta_0)$

(B) $MgL \cos(\theta_0)$

(C) $\frac{MgL \sin(\theta_0)}{2}$

(D) $\frac{MgL \cos(\theta_0)}{2}$

Example Question of AP Classroom

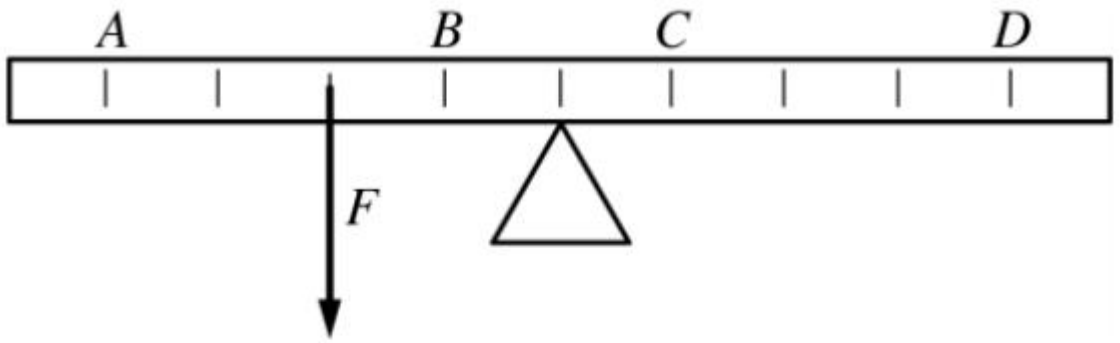

The figure above shows a uniform meterstick that is set on a fulcrum at its center. A force of magnitude F toward the bottom of the page is exerted on the meterstick at the position shown. At which of the labeled positions must an upward force of magnitude $2F$ be exerted on the meterstick to keep the meterstick in equilibrium?

(A) A

(B) B

(C) C

(D) D